MSP

DETAILS OF
I/C-O/G CABLE ENTRY-EXIT
HOLE ARRANGEMENT
A=Ø65, 2 NOS. @200 C/C
B= Ø32, 4 NOS. @100 C/C
C=Ø25, 4 NOS. @50 C/C

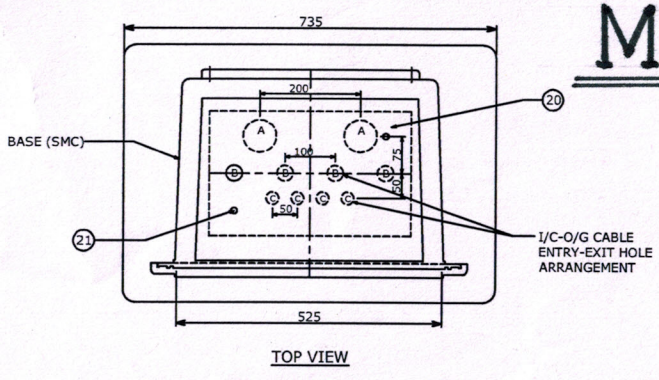

TOP VIEW

NOTES :-

(1) ALL BOLTS, NUTS TO BE PROVIDED WITH PLAIN WASHER OF SUITABLE SIZE.

(2) PILLAR SHELL SHALL BE MOULDED OF SMC & APRON FRAME WORK SHALL BE FABRICATED USING FRP PULTRUDED SECTIONS & SMC SHEET.

(3) COLOUR OF PILLER BOX SHALL BE GREY & THAT OF APRON SHALL BE BLACK.

(4) CLEARANCES :- BETWEEN BUS BARS - 85 mm (MIN.)
BETWEEN BUS BAR & ENCLOSURE WALL - 50 mm (MIN.)

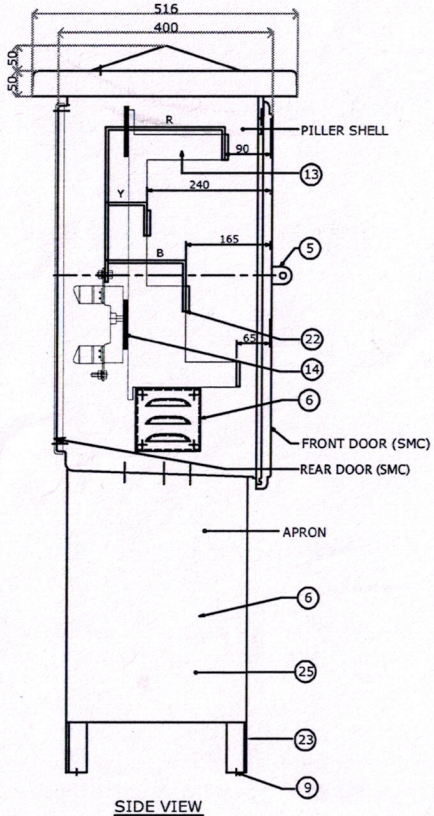

SIDE VIEW

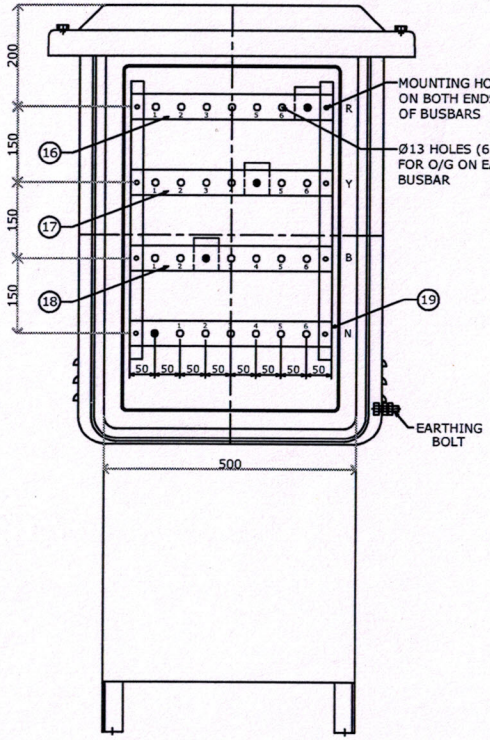

DOOR OPEN-FRONT VIEW

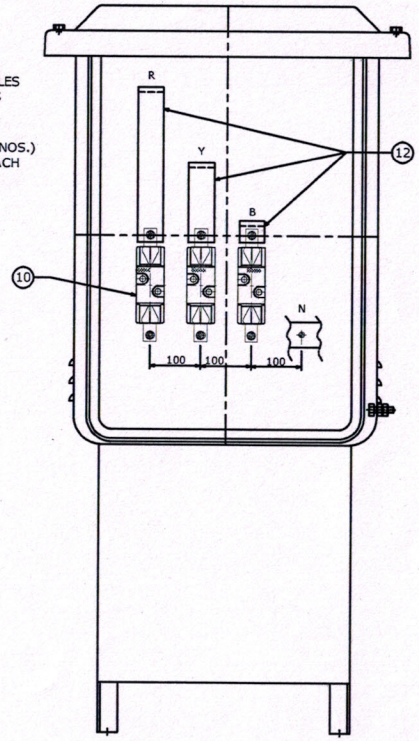

DOOR OPEN-BACK VIEW

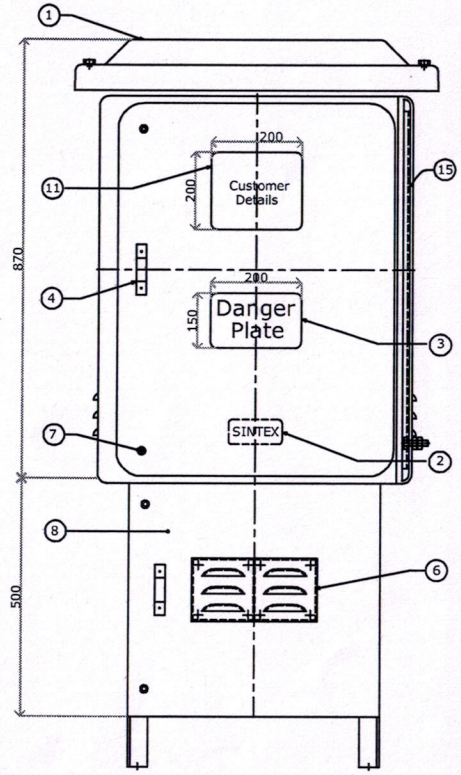

FRONT VIEW

UTTAR GUJARAT VIJ COMPANY LT	
MINI SECTION PILIER	
DRG. NO. UGVCL/R&D-PP/MSP-001	
CHECKED BY	R. B. Pat
APPROVED BY	Executive E
DRAWN BY	A. S. JANI, JR. DMAN

UGVCL, Rec. Offi
Mehsana.

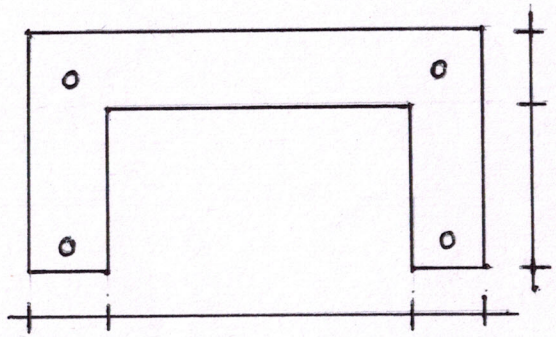

TOP VIEW

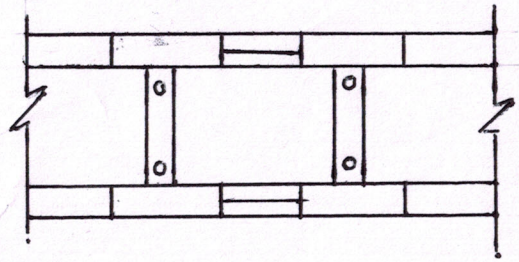

TOP VIEW

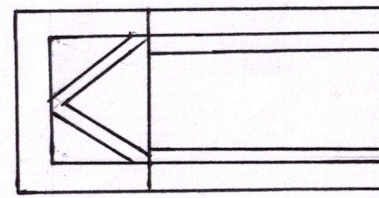

SIDE VIEW

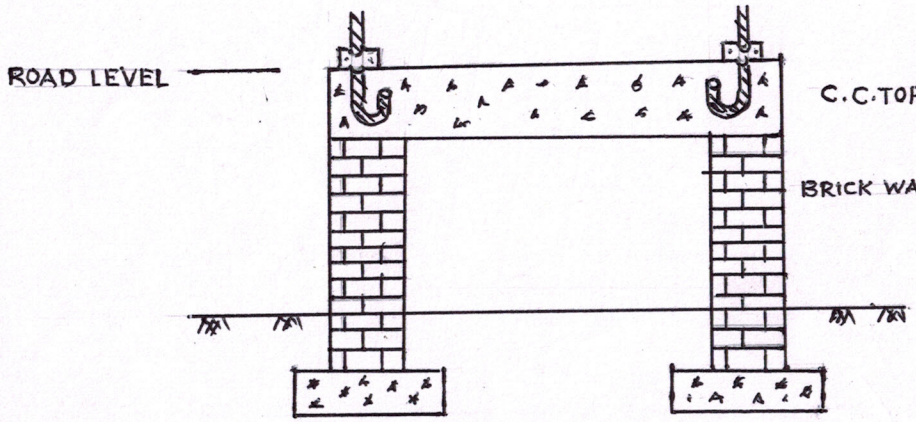

FRONT VIEW

M S P INSTOLATION OF GROUND

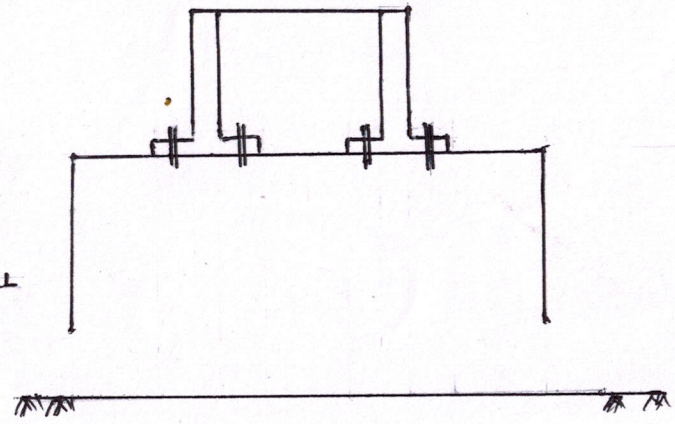

FRONT VIEW

M.S.P. INSTOLATION OF TRENCH

M S P PLINTH		
UGVCL/RED-PP/MSP PLINTH/002		
DRN BY	A.S.JANI	UGVCL R.O.C
CHD BY		MEHSANA
APPROV BY EE		RDRG.NO. DT. 12/1

Executive Engi... UGVCL, R... Office, Mehsana.