PRODUCED BY AN AUTODESK EDUCATIONAL PRODUCT

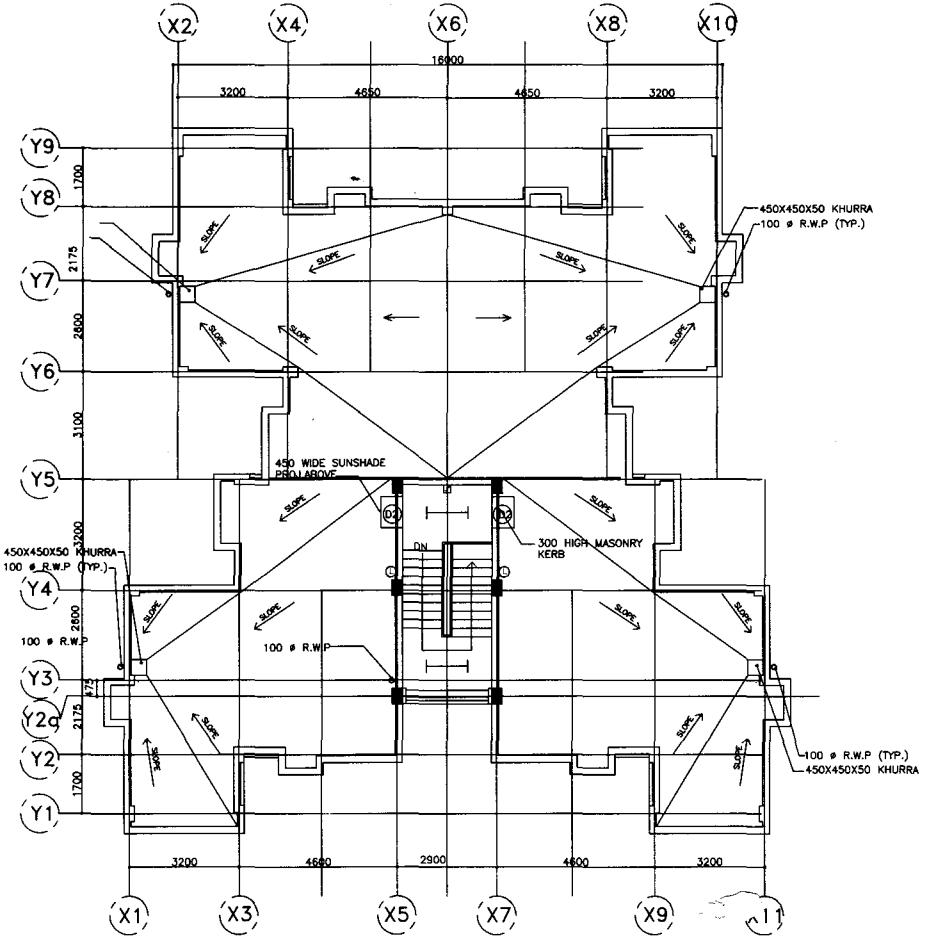

TERRACE PLAN

Deputy Engineer (Civil)
Registered Office, UGVCL,
Mehsana

Executive Engineer (Civil)
Registered Office UGVCL
MEHSANA

PRODUCED BY AN AUTODESK EDUCATIONAL PRODUCT
PRODUCED BY AN AUTODESK EDUCATIONAL PRODUCT
PRODUCED BY AN AUTODESK EDUCATIONAL PRODUCT